KMPW100 Multi-Parameter Controller Manual

Table of contents

1.Introduction 3
2.Features 3
3.Dimensions 4
4.Technical Parameters 5
5. Installation 5
5.1 Safety Instructions 5
5.2 Backplane Connection Introduction 6
5.3 Wall Mounting 8
5.4 Password Login Privilege 9
6.Power on 9
6.1 Time setting 9
6.2 Enter the operating environment 9
7. Main Interface 10
8. Historical Data 11
9. Real-time curve 13
10. Probe Calibration 13
10.1 Select Probe 14
10.2 Zero-point Calibration 15
10.3 One-point Calibration 15
10.4 Two-points Calibration 16
10.5 Restore 17
11. System Setting 17
11.1 System Setup Interface 17
11.2 Relay Settings 17
11.2.1 Relay Timing 17
11.2.2 Relay Control 18
11.3 4-20mA (optional) 18
11.3.1 4-20mA Calibration 19
11.3.2 4-20mA Setting 19
11.4 Input Signal 20
11.5 ID Modify 20
12. Transmitter External Output 20

Dear user :

Thank you very much for purchasing KACISE's high-quality KMPW100 Multi-Parameter Controller. Before you use it, please read this manual in detail, which will be of great help in the use and maintenance of this instrument, and can avoid unnecessary troubles caused by improper operation and maintenance.

Please comply with the operating procedures and precautions in this manual.

To ensure the effectiveness of the after-sales protection provided by this instrument, please do not use and maintain this instrument in any way other than that specified in this manual.

Any failures and losses caused by failure to comply with the precautions specified in this manual are not covered by the manufacturer's warranty, and the manufacturer does not assume any relevant responsibility. Please keep all documents properly. If you have any questions, please contact our after-sales service department.

When you receive the instrument, please carefully open the package and check whether the instrument and accessories are damaged due to transportation. If any damage is found, please contact our after-sales service department and keep the packaging for return processing.

When the instrument fails, please do not repair it yourself, please contact our after-sales service department.

1.Introduction

KMPW100 is a universal multi-parameter controller that is compatible with KACISE single-parameter sensors and multi-parameter sensors, making the sensor plug-and-play and displaying the measured value in real time; the electrode installation and replacement are quick and convenient; a variety of data transmission methods are optional, and it has data storage and export functions. The transmitter has a simple interface, simple operation and easy use.

KMPW100 multi-parameter controller can realize online monitoring of multiple water quality parameters at the same time through optional sensors according to user needs, such as dissolved oxygen (DO), pH, ORP, conductivity (salinity), turbidity, COD, ammonia nitrogen, suspended solids, sludge concentration, chlorophyll, blue-green algae, oil in water, chroma and transparency and other parameters. One meter for multiple uses, easily control water quality problems.

Widely used in automatic water quality detection in drinking water, surface water, groundwater, industrial wastewater, domestic sewage and other fields.

2.Features

- Strong versatility, supports any combination of KACISE water quality sensors. Plug and play, with automatic identification 7" color touch screen, easy to operate.
- Automatic data storage, real-time curve display, USB data export support, and local data storage capacity of over 2 years.
- Supports up to 8 channels of 4-20mA analog output with RS485 digital output, and more convenient for system integration.
- Integrated 5-way relay, 2-way digital I/O, can be matched with DTU remote control, control function is more comprehensive.
- Wall-mounted design,small size, reliable and durable.

3.Dimensions

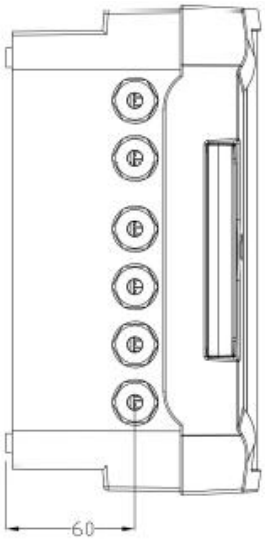

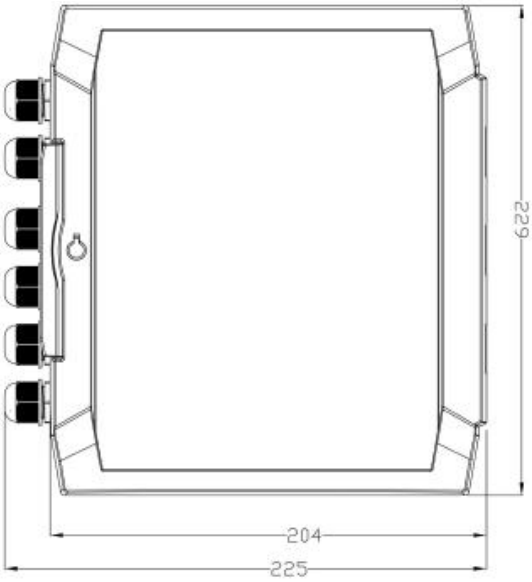

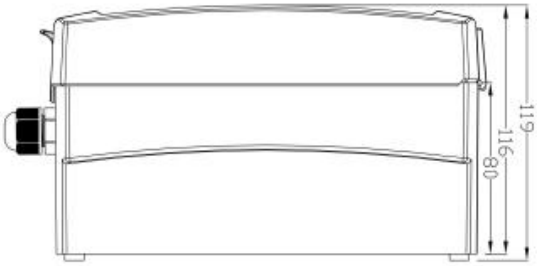

4.Technical Parameters

Display	7" color touch screen, LED backlight
Resolution	800* 480
I/O Interface	Two channel
Electrical Relay	Five channels
4-20mA	Standard 1 channel (expandable to 8 channels)
Measurement Parameter	Support KACISE's digital sensors, such as online multi-parameter,COD, ammonia nitrogen, ORP, salinity, BGA, chlorophyll, OIW, etc
Power Supply	220 V AC or 24V DC (optional)
Communication Protocol	Supports RS-485, MODBUS protocol
Data Storage	Continuous storage >2 years
Data Copy	Supports USB disk export
Material	ABS housing
Working Temperatur	0-50 ℃
Size	225mm*229mm*119mm (height*width * thickness)
Installation	Wall-mounted

5. Installation

5.1 Safety Instructions

Warning: Beware of high voltage!

Hazard of personal injury or death from electric shock: Always disconnect power during electrical connections.

The following are general safety guidelines and warnings. Failure to follow these guidelines may result in equipment damage and/or personal injury.

- The transmitter may only be installed and operated by qualified personnel who are familiar with the equipment.
- Before any wiring operation, make sure that all cables are de-energized.
- The transmitter may only be repaired by trained and authorized personnel.
- Except for routine maintenance and cleaning of the transmitter as described in this manual, the transmitter may not be tampered with or modified in any way.
- Kacise is not responsible for damage caused by unauthorized modifications to the transmitter.
- If the equipment is used in a manner not specified by the manufacturer, the hazard protection provided by the equipment may be impaired.

WARNING:

- Installing cables and performing maintenance on this device may require exposure to hazardous voltages.
- Before performing maintenance, the main power supply must be disconnected.

- The device does not have a power switch! A circuit breaker must be installed near the device installation location and within easy reach of the operator; it should be marked as a disconnect device for the device.
- The electrical installation must be carried out in accordance with the National Electrical Code or any other applicable national or regional regulations.

NOTE:
The use of improper tools can scratch the housing or damage the seal, thus destroying the airtightness of the housing!

- Do not use pointed or sharp tools (such as a knife) to open the housing.
- Only suitable cross-head screwdrivers are allowed.

5.2 Backplane Connection Introduction

Backpanel Output Connection

When using, users can choose to connect the corresponding terminals of 220V AC or 24V DC, Power Relay, DTU485, Sensors, Digital Signal Output, Relay Output, and 4-20mA Output.

220V AC/24V DC: 220V AC or 24V DC power input terminal.
Power Relay: Power relay switch.
DTU485: RS485 output interface.
Sensors: Sensor input terminal.
Digital Signal Output: Digital signal input terminal.
Relay Output: Relay switch (default normally open).
4-20mA Output: 4-20mA output terminal.

See the table below for detailed description

NO.	Form	Sign	Description	Note
P1	**Power Relay**	NI	Normally Open	Power rating: 2.5KW
		OUT	Common Point	
P2	**220V AC/ 24V DC**	220N/24V-	AC Power (Zero Line)/24V-	Selected before leaving the factory, cannot be mixed
		220L/24V+	AC Power Line(Firewire)/24V+	
		⏚	Ground	
P3	**Sensors**	12V	Connecting the sensor red wire	

		485B	Connecting the sensor white wire	
		485A	Connecting the sensor green wire	
		GND	Connecting the sensor black wire	
P4		12V	Connecting the sensor red wire	
		485B	Connecting the sensor white wire	
		485A	Connecting the sensor green wire	
		GND	Connecting the sensor black wire	
P5		12V	Connecting the sensor red wire	
		485B	Connecting the sensor white wire	
		485A	Connecting the sensor green wire	
		GND	Connecting the sensor black wire	
P6	**Digital Signal Output**	12V	12VDC	Active devices (such as photoelectric detection switches) need to be connected to 12V, passive devices (such as liquid level floats) do not need to be connected to 12V
		S1	signal input	
		GND	Ground	
P7		12V	12VDC	
		S2	signal input	
		GND	Ground	
P8	**Relay output (switch) Relay Output**	COM1	common point	
		NO1	normally open	
		COM2	common point	
		NO2	normally open	
P9		COM3	common point	
		NO3	normally open	
		COM4	common point	
		N04	normally open	
P10	**4-20mA Output**	I1+	1st current output positive stage	
		I1-	1st current output negative stage	
		I2+	2nd current output positive stage	
		I2-	2nd current output negative stage	
P11		I3+	3rd current output positive stage	
		I3-	3rd current output negative stage	
		I4+	4th current output positive stage	
		I4-	4th current output negative stage	

P12		I5+	Sth current output positive stage	
		I5-	Sth current output negative stage	
		I6+	6th current output positive stage	
		I6-	6th current output negative stage	
P13		I7+	7th current output positive stage	
		I7-	7th current output negative stage	
		I8+	8th current output positive stage	
		I8-	8th current output negative stage	
P14	**DTU485**	B	RS485 digital output_B	Screen external communication interface
		A	RS485 digital output_A	

Note: Perform sensor wiring, 4-20mA output wiring, relay wiring, and power line wiring in sequence, and power on after complete assembly.

1. If the transmitter is a 220V AC power version, connect the AC power line to terminals AC-L, AC-N and (ground); if the transmitter is a 24V DC power version, connect the DC power line to terminals 24V+ and 24V-.

2. Connect the sensor cable to terminal blocks P3, P4, and P5 (Sensors, if there are more probes, parallel wiring is required). Red wire-power supply (VCC), white wire-485 data_B (485_B), green wire-485 data_A (485_A), black wire-ground (GND).

5.3 Wall Mounting

General Installation Information

① Install the transmitter under a sunshade, in an area not exposed to direct sunlight and without extreme temperatures.

② Install the transmitter in an area where vibration, electromagnetic and radio frequency interference are minimal or non-existent.

③ The transmitter can be mounted on a panel, wall or specific equipment surface, as shown below.

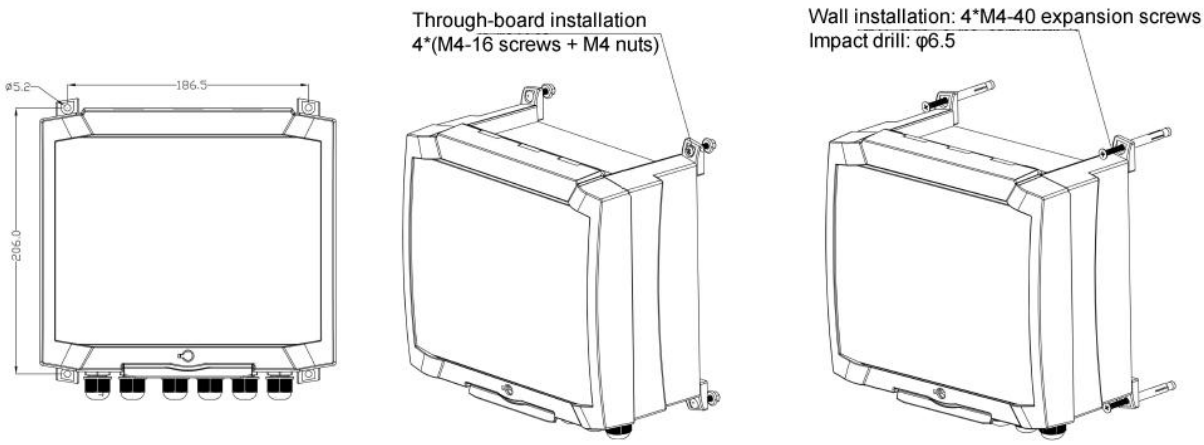

5.4 Password Login Privilege

Operator	Not log in	Technologist
Default password	Not log in	66666
Operation Function	View da ta	View data
	View historical data	View historical data
	Real-time curve	Real-time curve
		Probe calibration
		System Settings
		Clear historical data

6.Power on

The KMPW100 multi-parameter controller is an online monitoring device and does not have a power switch for the time being. When starting up, connect the power cord to the power interface of the multi-parameter transmitter, connect the power plug to the mains or 24V DC, and start the device when powered on. The device enters the operating environment by default and starts to collect various parameters normally.

6.1 Time setting

Set the time of the controller, turn on the device, and the "Starting" window pops up. Press and hold the touch screen to enter the system configuration interface.

Select the "Time" option, set the date and time, and the time is 24 hours by default.

6.2 Enter the operating environment

Menu structure

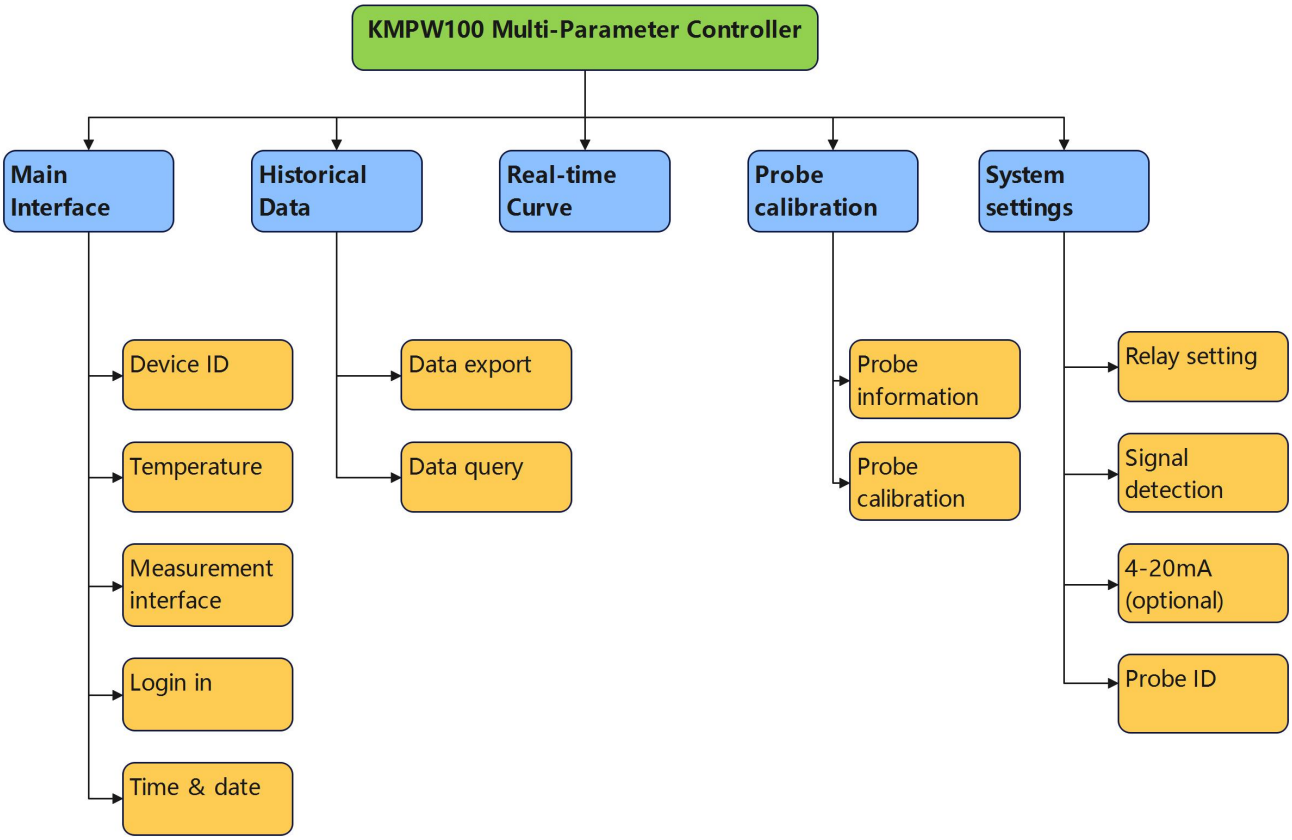

7. Main Interface

This device can realize automatic identification of sensor types and can display real-time measurement values of 1-8 parameters. The temperature is displayed in the upper right corner. The figure below is the main screen of the multi-parameter transmitter.

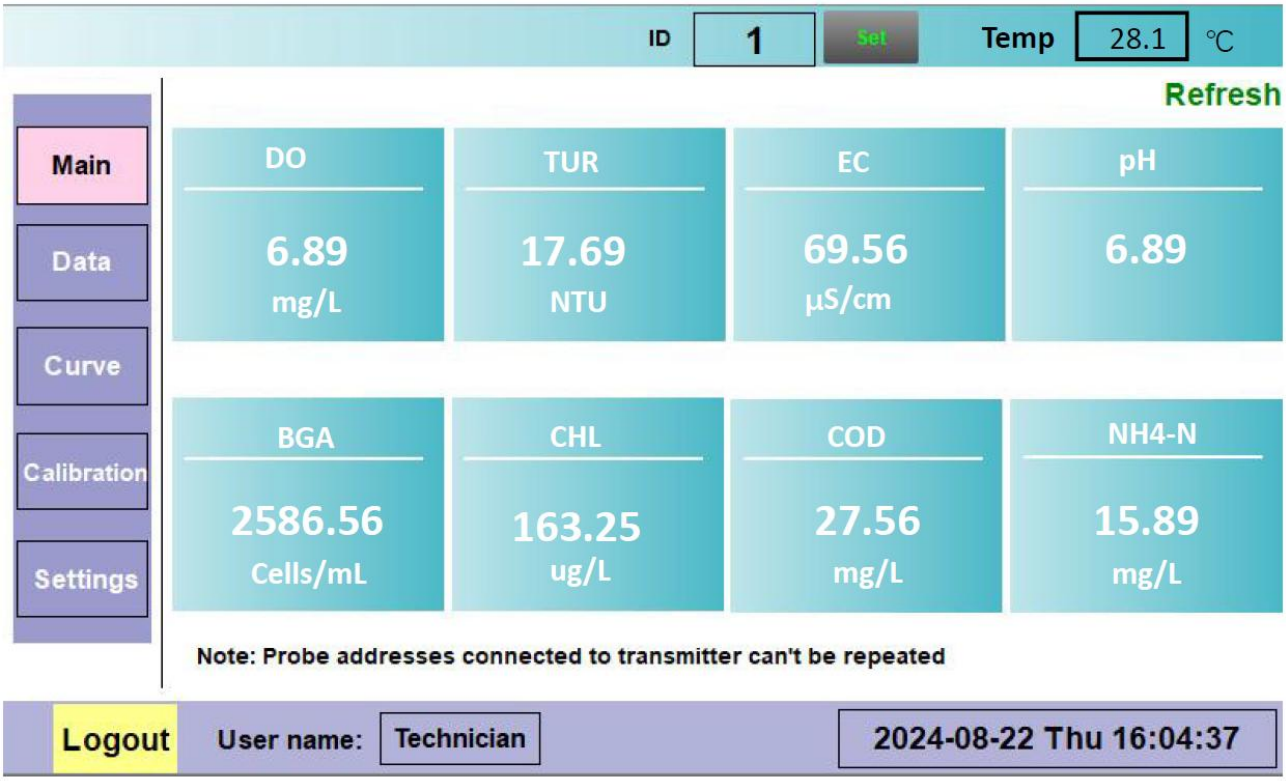

The main screen displays from top to bottom: device ID, temperature, menu bar (main screen/historical data/real-time curve/probe calibration/system settings), refresh, multi-parameter sensor measurement value, login/logout, date and time.

① Device ID: Modify the ID, you can modify the transmitter address.

② Refresh: The refresh function supports probe hot swap.

③ Note: 6 probe addresses 1-6.

8. Historical Data

Historical data interface: On the main screen → click "Historical data" → enter

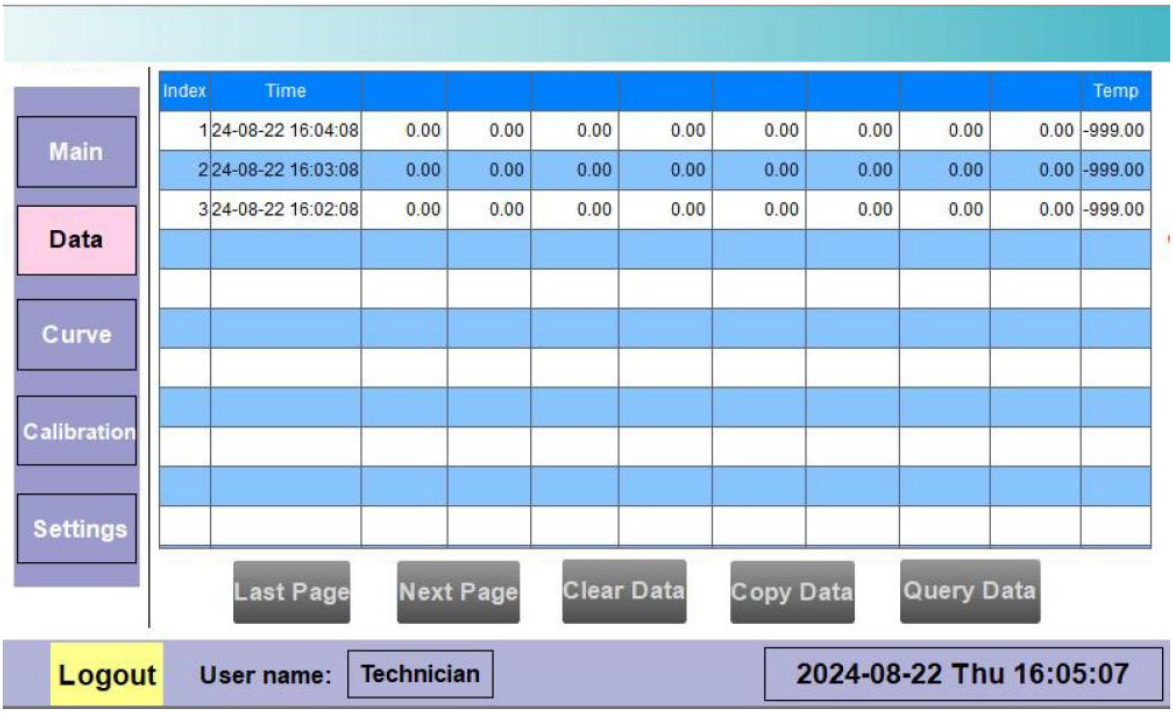

Each page displays 11 historical records; data is stored once every minute, and storage starts by default when the power is turned on. The functions are as follows:

(1) Data export: Insert a USB flash drive, click "Data export", select "Start time" and "End time", and click "OK" to export the stored data of the selected time period. The time variable format is "YYYY-MM-DD HH:MM:SS".

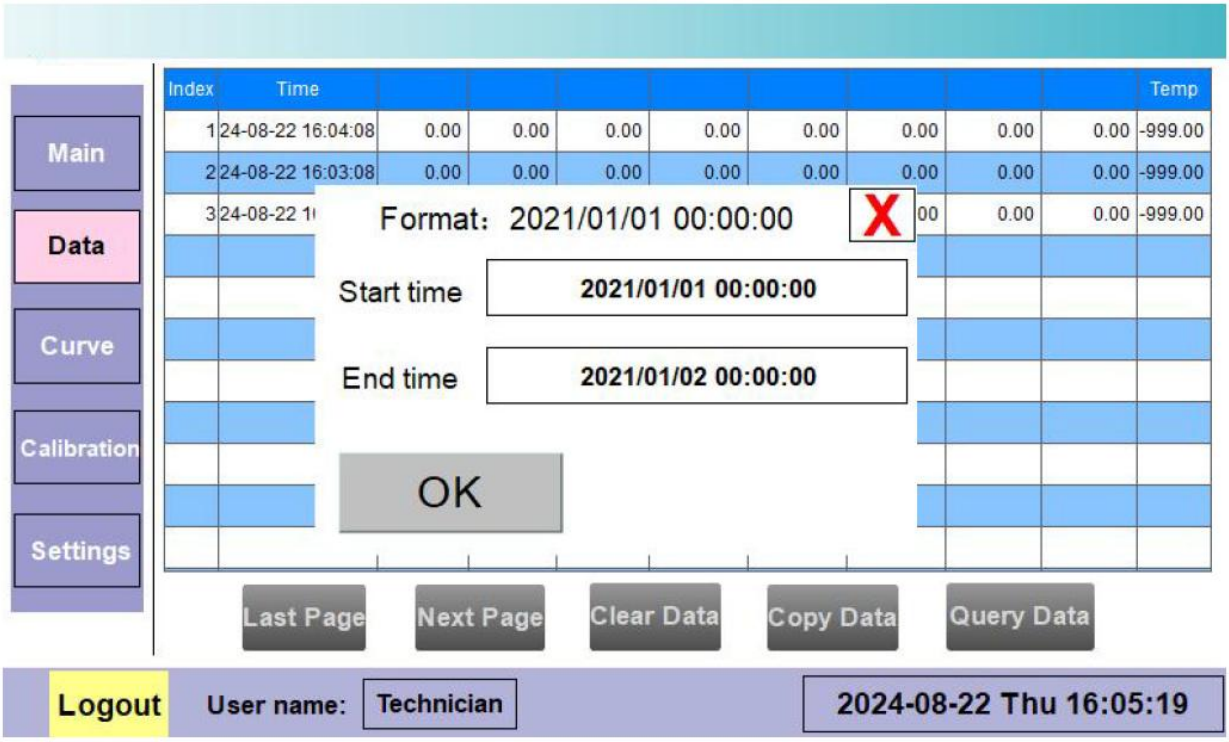

(2) Query: You can set the time conditions for querying data.

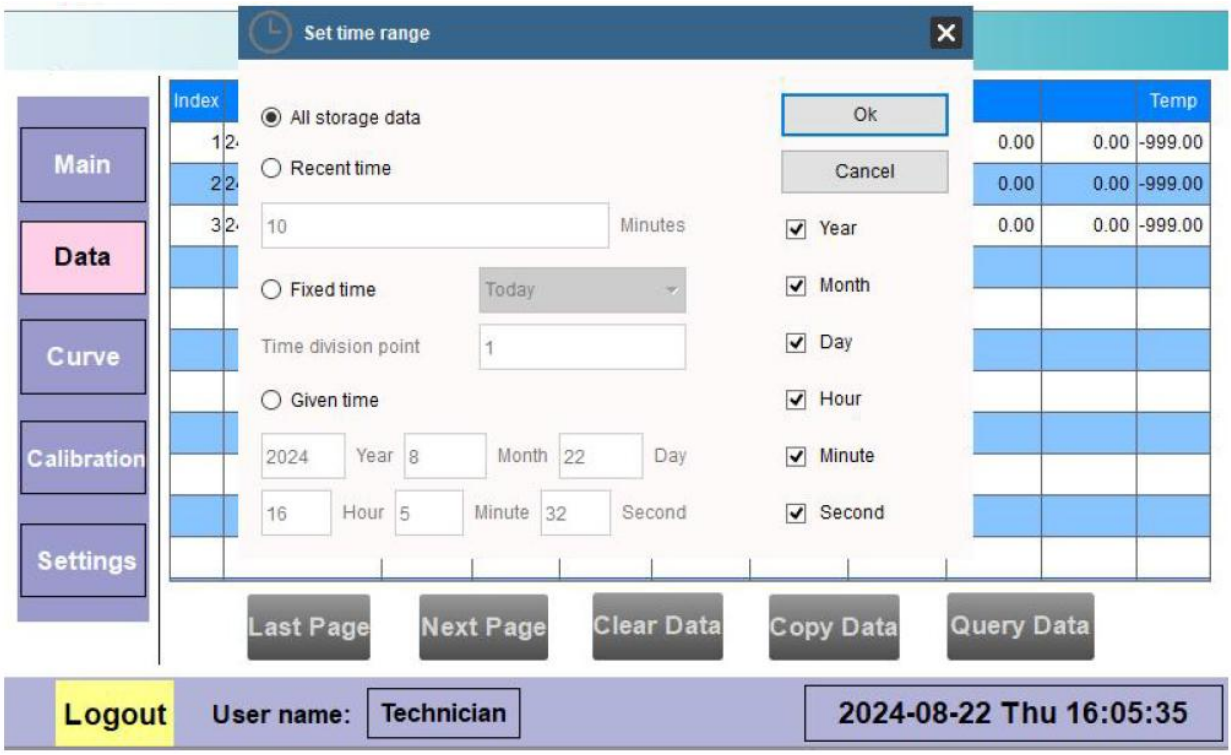

① All saved data: saved data of all time periods.

② Recent time: displays saved data within the last minute.

③ Fixed time: displays saved data starting from a fixed time point. Fixed time can be divided into today, previous day, this week, last week, this month, and last month. For today and previous day, the time division point means hour, and the value should be between 0-23; for this week and last week, the time division point means day of the week, and the value range should be between 1-7; for this month and last month, the time division point means day, and the value range should be between 1-31.

④ Specified time: displays saved data within the time period from the start time to the end time. The start time and the end time are associated with string variables. The time variable format is "YYYY-MM-DD HH:MM:SS". The end time must be greater than the start time. If the time format is set incorrectly, it will be considered invalid.

9. Real-time curve

The real-time curve records the changes of variable values in real time like a recorder.
Real-time curve interface: On the main screen → click "Real-time curve" → enter

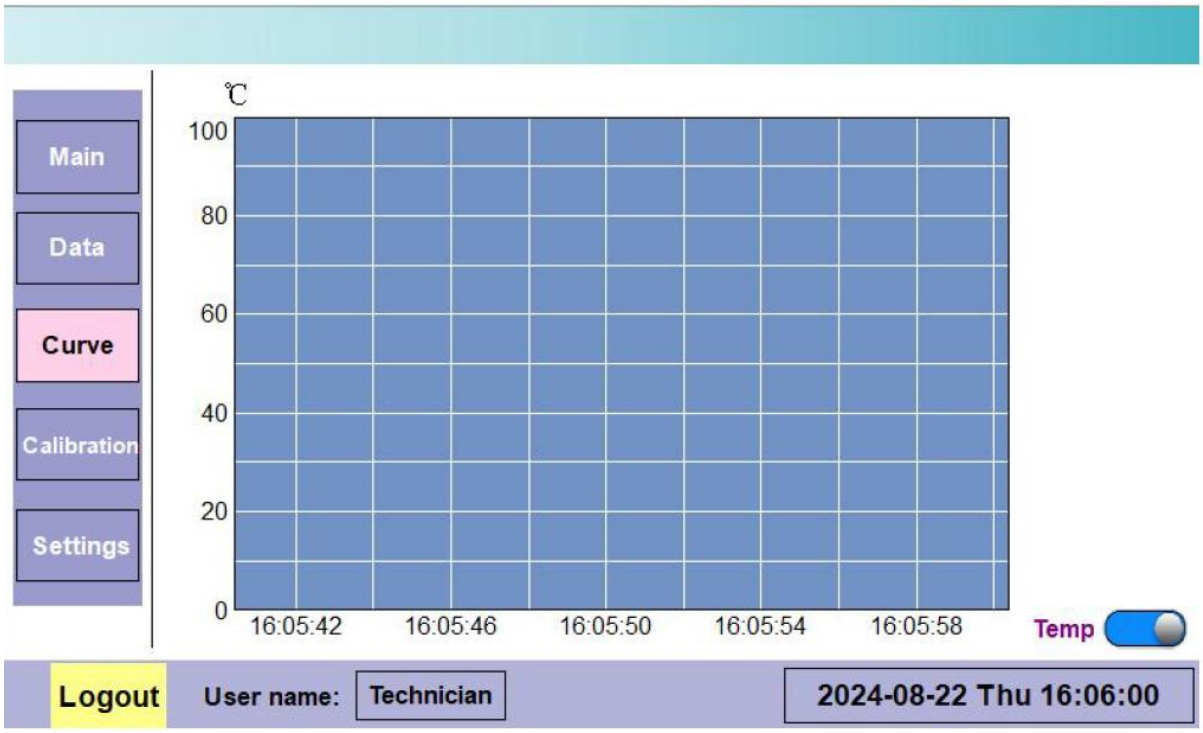

10. Probe Calibration

Click “Logout”, password 666666, login to enter the probe calibration interface.

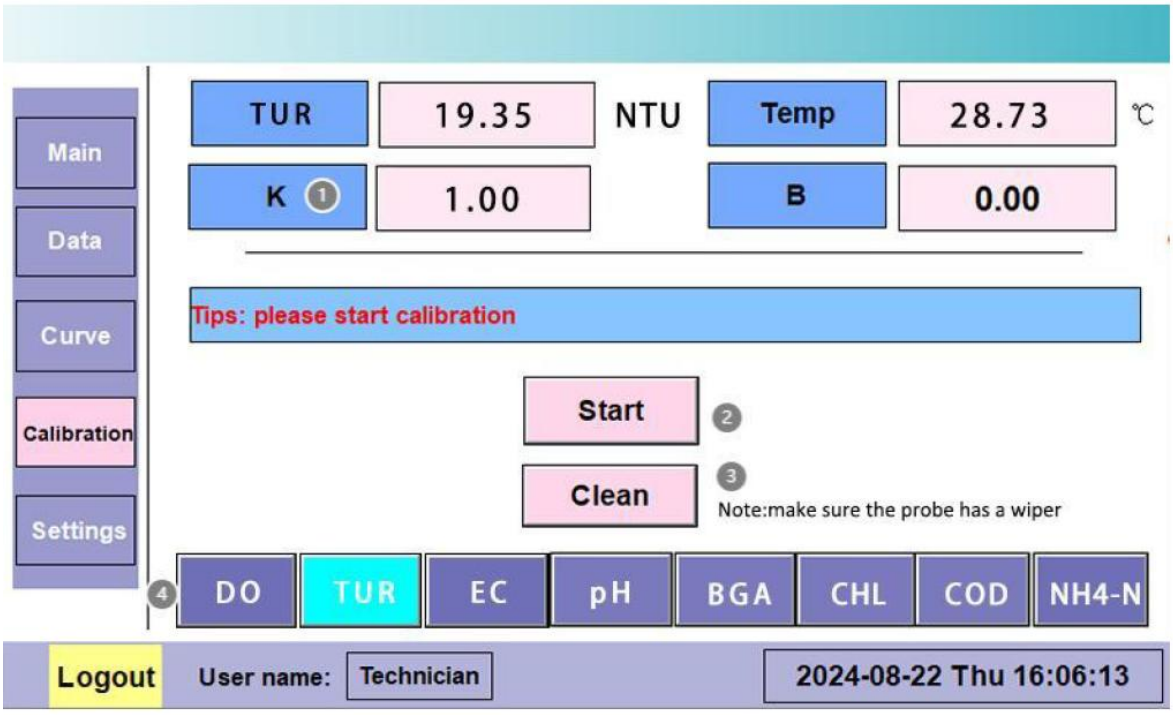

① User calibration parameters of the probe, slope is K, bias is B. Users can manually input to change.

② Click "Start Calibration" Each probe includes zero calibration, one-point calibration, two-point calibration and reset. When connecting different probes, please select the number of calibration points supported by the channel where the probe is located.

③ Click "Cleaning Cycle", the default brush cleaning cycle is 30min, and the brush cleaning cycle can be reset. Select "Manual Cleaning" to turn the brush immediately. Note: Please make sure the probe has a brush.

④ You can switch the parameters that need to be calibrated (1-8), and automatically enter the calibration interface of parameter 1 by default.

10.1 Select Probe

Select the probe to calibrate, using the turbidity sensor calibration as an example.

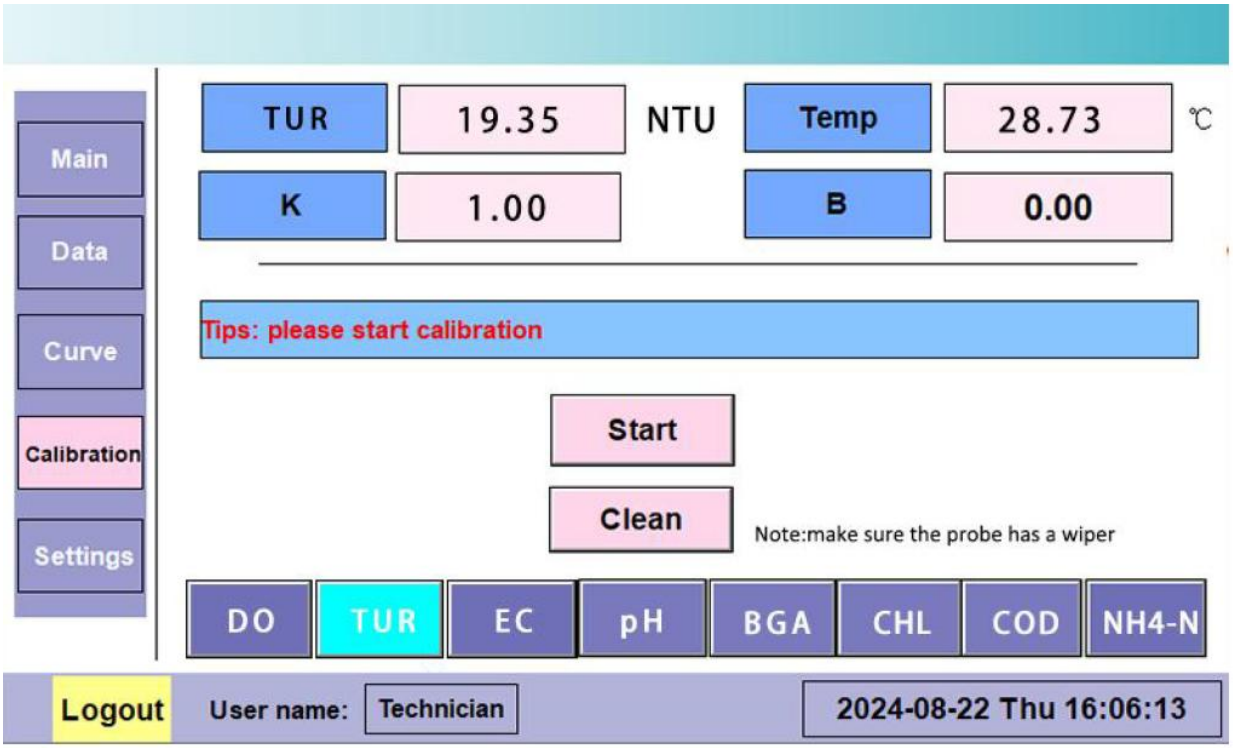

10.2 Zero-point Calibration

Click "Zero Point Calibration", enter the zero point standard solution value as "0" according to the prompt, click "Next", put the probe into the standard solution, wait for the value to stabilize, and press "Confirm", as shown in the figure below. The zero point calibration is completed, and the operation prompts "Slope is qualified".

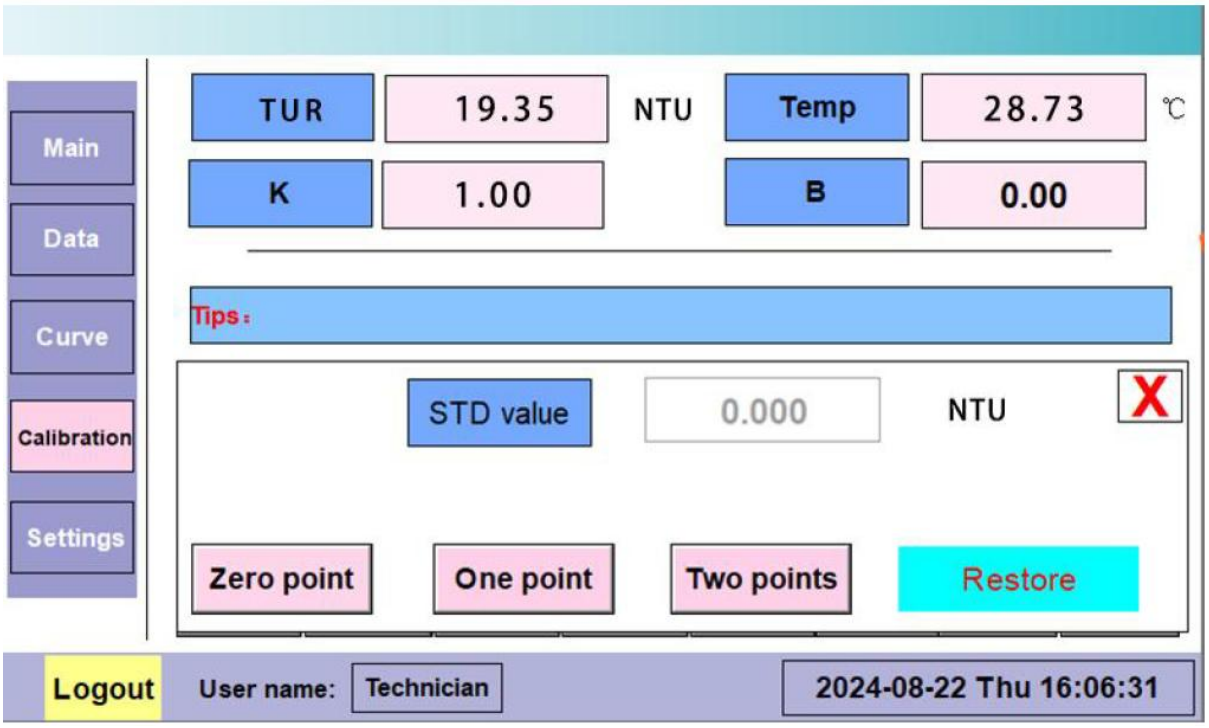

10.3 One-point Calibration

Taking the turbidity sensor calibration as an example, click the "Start Calibration" button to enter the calibration interface. The one-point turbidity calibration is completed in the 460NTU standard solution.

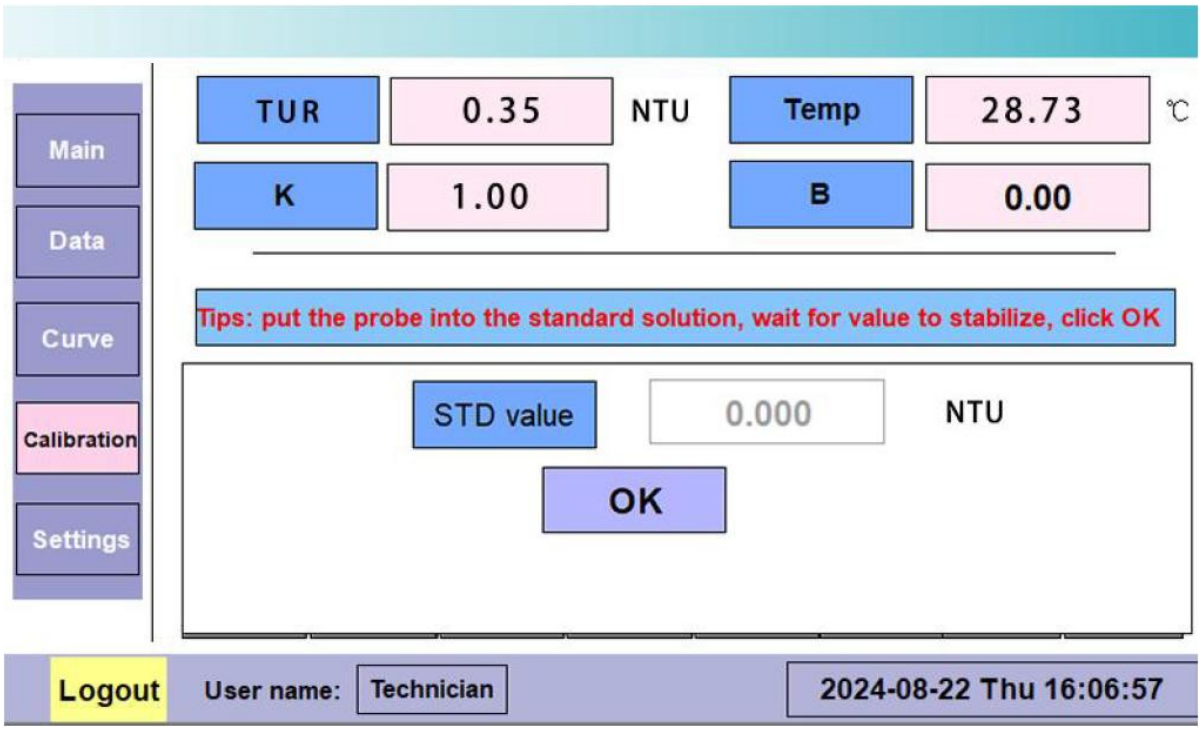

Click "One-point calibration", enter the calibration standard solution value "460" according to the prompt, click "Next", put the probe into the standard solution, wait for the value to stabilize, and press "Confirm". The one-point calibration is completed, and the operation prompts "Slope is qualified".

10.4 Two-points Calibration

Take the turbidity sensor calibration as an example. Click the "Start Calibration" button to enter the calibration interface. The two-point calibration of turbidity is completed in deionized water and 460NTU standard solution.

Click "Two-point Calibration", enter the first point calibration value "0" according to the prompt, click "Next", put the probe into the standard solution, wait for the value to stabilize, and press "Confirm", as shown in the figure below.

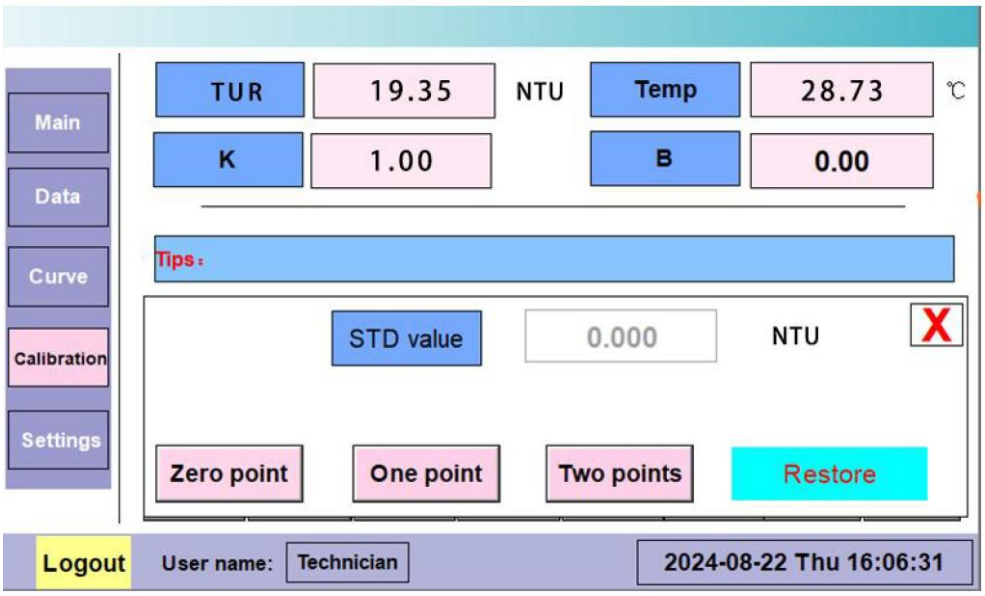

Enter the second point calibration value "460" according to the prompt, click "Next", put the probe into the standard solution, wait for the value to stabilize, and press "Confirm", as shown in the figure. The two-point calibration is completed, and the operation prompts "Slope is qualified".

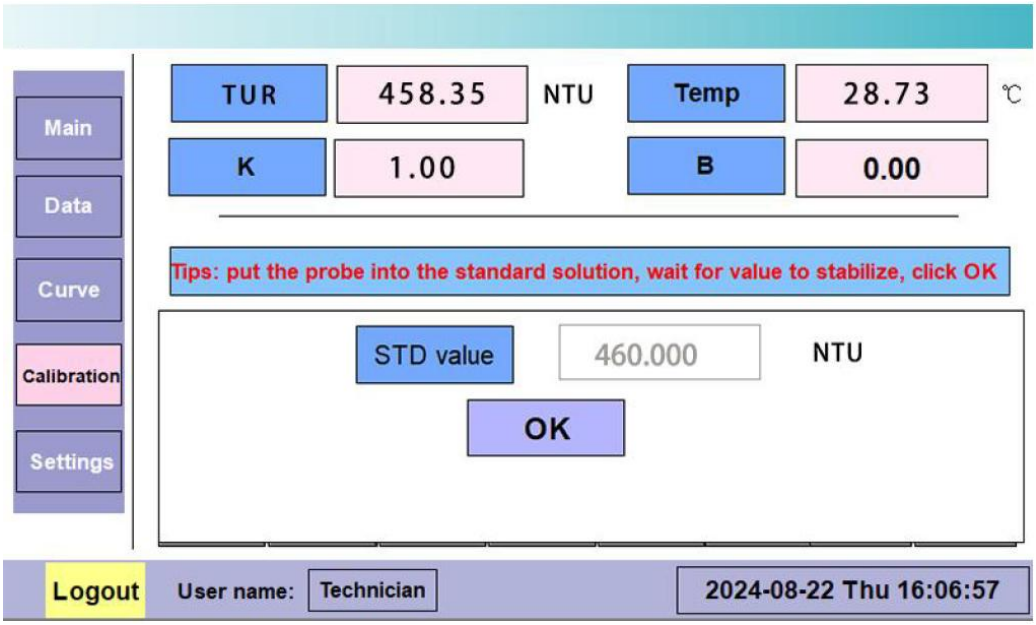

10.5 Restore

The slope is K and the bias is B. The sensor calibration reset reverts to K = 1 and B = 0.

11. System Setting

11.1 System Setup Interface

Click "Logout", password 666666. Login to enter the system setup interface, contains settings for the transmitter's Relay testing, Input signal, 4-20mA(option), and ID modification.

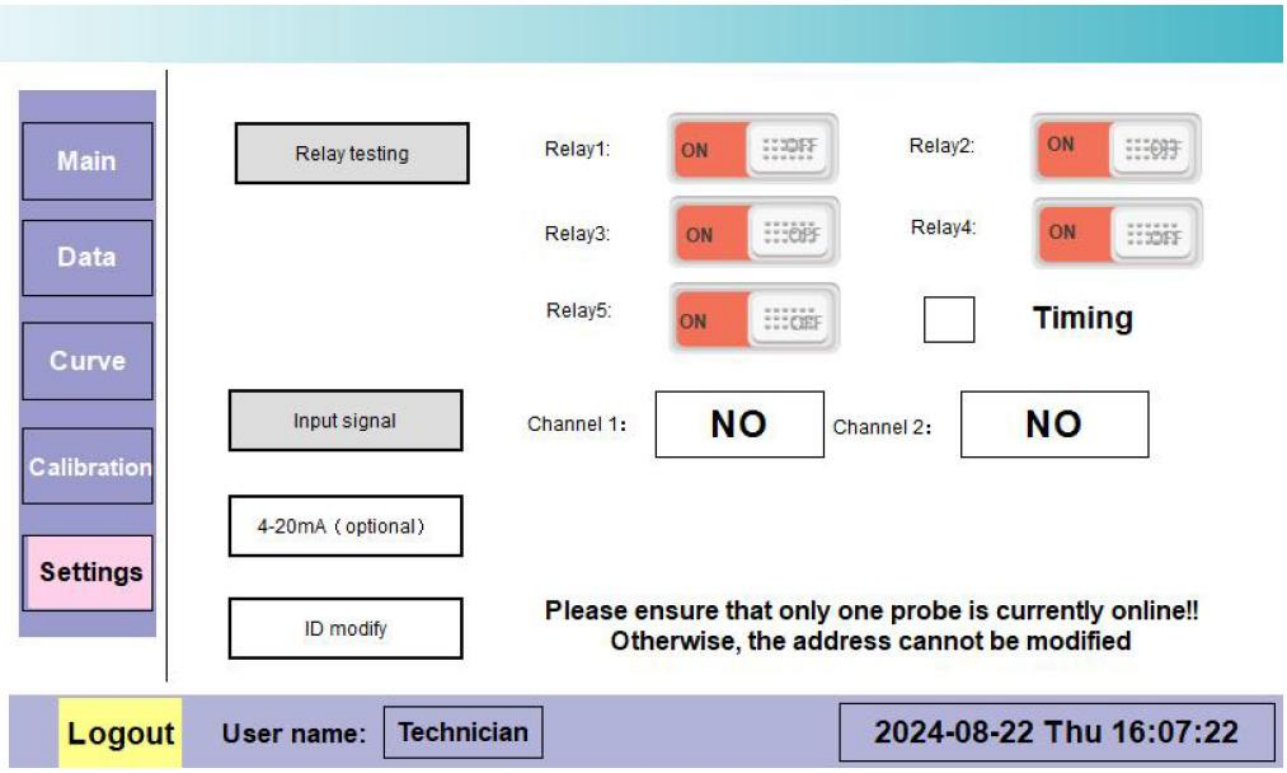

11.2 Relay Settings

The KMPW100 multi-parameter transmitter contains 5 relays. Relay1, Relay2, Relay3, and Relay4 contain control functions. Relay High Power contains timing and high power control functions.

11.2.1 Relay Timing

Select the "Timer Switch" of Relay High Power. When Relay High Power is set to 10s on and 20s off, it means that the high power relay is turned on once every 10 seconds and the on time is 20 seconds. Note: To turn on the timing function, you must check the previous box.

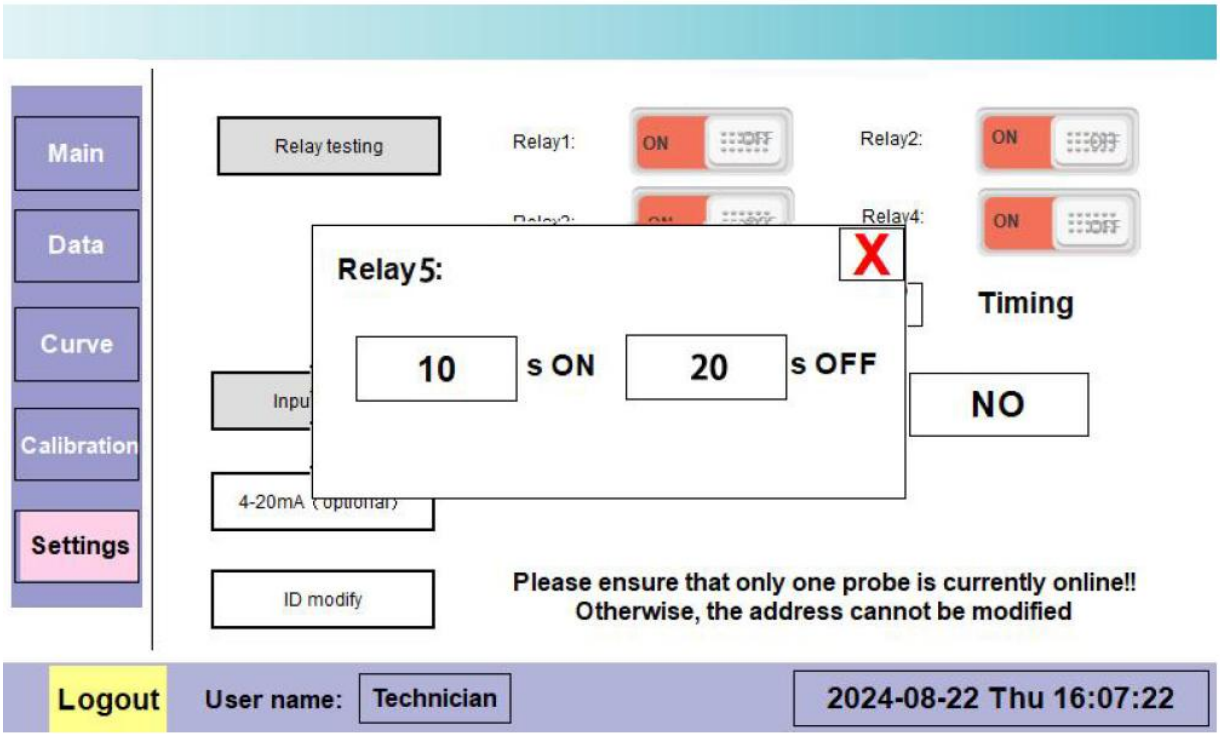

11.2.2 Relay Control

It can be externally connected to the signal switch of some electrical equipment, such as water pumps.

11.3 4-20mA (optional)

In the system settings interface, click "4-20mA (optional)" to enter the 4-20mA (optional) settings interface. KMPW100 multi-parameter transmitter contains eight 4-20mA channels, each of which includes calibration and settings.

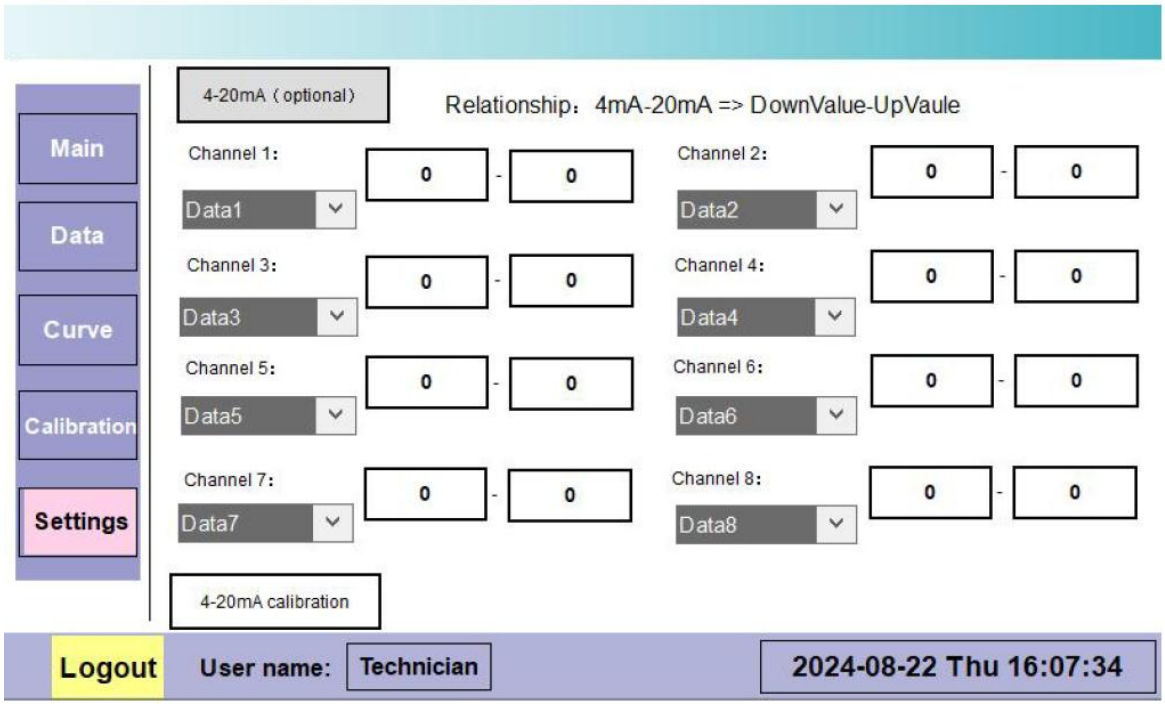

11.3.1 4-20mA Calibration

In the 4-20mA setting interface, click ”4-20mA Calibration” to enter the 4-20mA calibration interface.

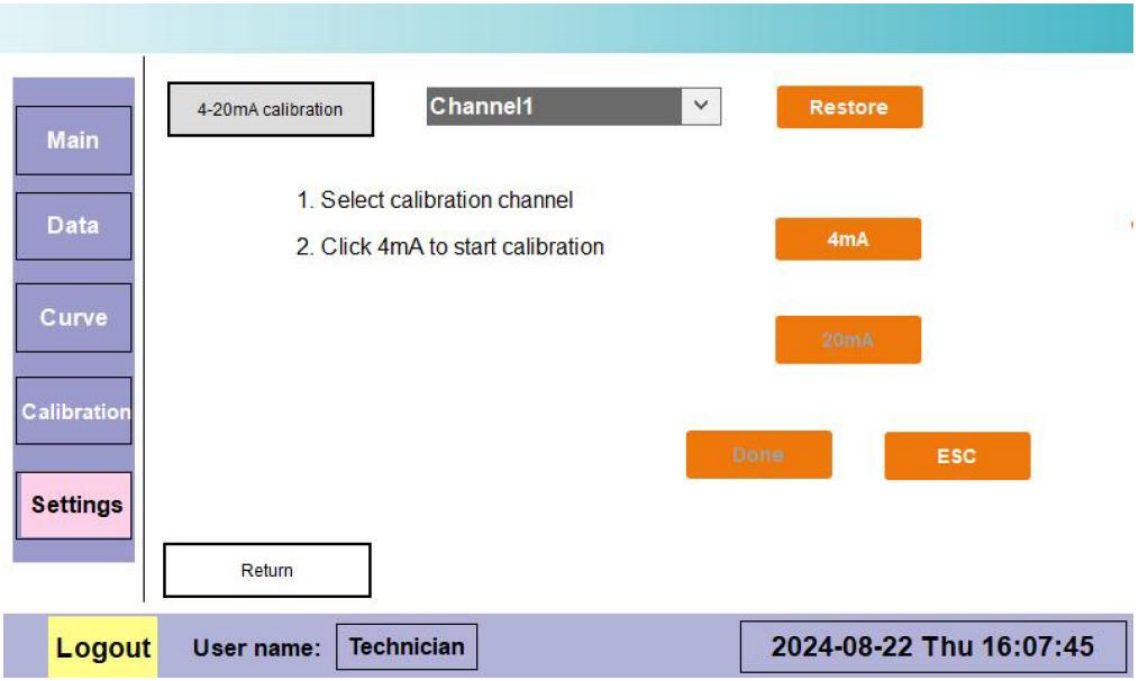

For 4-20mA calibration, take “ Channel 1” calibration as an example and follow the prompts.

① Select calibration channel

② Click 4mA to start calibration

③ Input the actual current value corresponding to 4mA

④ Click 20mA

⑤ Input the actual current value corresponding to 20mA.

Finally, click “Calibration Complete” to end Channel1 calibration, the calibration will automatically jump to the Channel2 calibration.

Click “Restore” restores 4-20mA calibration.

11.3.2 4-20mA Setting

In 4-20mA setting interface, Channel 1 corresponds to Data1 by default, Channel 2 corresponds to Data2 by default, and Channel 3 corresponds to Data3 by default .....The drop-down menu allows you to select different probe to output a 4-20mA value. Data 1 represents Probe 1, Data 2 represents Probe 2, Data 3 represents Probe 3... and so on, where Channel 1 can select the temperature output.

The 4-20mA setting is set within the measurement range of the sensor, with 4mA corresponding to the low value and 20mA corresponding to the high value. In the case of a turbidity sensor for example, 4mA corresponds to 0 and 20mA corresponds to 1000. When connecting a different probe, a reset is required and the settings are saved at power off.

Setting range description

4-20mA settings all need to be set within the measurable range. The specific measurement ranges are as follows:

Measuring parameters	Measuring range
Dissolved Oxygen Sensor	0-20mg/L or 0-200% saturation
Conductivity Sensor	EC:0.001-5mS/cm or 0.001-100mS/cm SAL:0-2.5ppt or 0-80ppt TDS:0-3200mg/L or 0-64000mg/L
Turbidity Sensor	0-1000NTU
Chlorophyll Sensor	0-500μg/L
Sludge Concentration Sensor	Low range :0-4000mg/L ; High range:0-15000mg/L
NH4-N Ammonium Sensor	0-100mg/L / 0-1000mg/L
Blue-green Algae Sensor	0-300000cells/mL
Qil-in-water Sensor	0-150ppm
COD Sensor	COD: 0-500mg/L(low range) ; 0-1500mg/L(high range) TOC: 0-180mg/L(low range) ; 0-600mg/L(high range) TUR:0-500NTU
CD OM Sensor	0-400ppb
Ph Sensor	0-14
ORP Sensor	-1999-1999mV
Depth Sensor	0m-2m…100m

11.4 Input Signal

Access to signals that can detect the status of floats or water levels, etc

11.5 ID Modify

When only one probe is connected to the transmitter, the ID address of the probe can bemodified.

Note: The online multiparameter sensor address can only be 1.

12. Transmitter External Output

The Online controller can also receive Modbus RTU protocol commands from the host computer and output sensor data. (or access to a wireless module for networking communications) The protocol frame format is as follows. Communication setting 8n1, baud rate 9600.

Measured value request frame

The format of the request frame for obtaining measurements is as follows:

Definition	Address	Function Code	Start Address		Number of Registers		CRC	
Byte	0	1	2	3	4	5	6	7
Content	0x01	0x03	0x00	0x00	0x00	0x12		

Response Frame

The format of the transmitter answer frame is as follows (Remarks: Data 1-Data 8, temperature value:floating point number, sequence CDAB)

Definition	Address	Function Code	Number of Byte	Register Data	CRC	
Byte	0	1	2	3-38	39	40
Content	0x01	0x03	0x24			

Depending on the type of connected probe, Data 1 through Data 8 represent different values, details are as follows:

3-6	7-10	11-14	15-18	19-22	23-26	27-30	31-34	35-38
Data 1	Data 2	Data 3	Data 4	Data 5	Data 6	Data 7	Data 8	Temp

Taking DO as an example, the temperature value is 26.397 ℃ , the dissolved oxygen value is 4.801mg/L, and the transmitter responds to the frame as follows.

Temperature values and dissolved oxygen value bytes are distributed as follows:

Dissolution oxygen value (mg/L) (3~6)				**Temperature value (35~38)**			
0xa1	0xcb	0x40	0x99	0x2d	0x0e	0x41	0xd3

Relay Control

Relay definition list:

Register Name	Data Type	Offset Address	Register Type	Remark
Relay1	Unsigned integer	0x14	0x03/0x10	When set to a timed function, only reads, not writes are possible.
Relay2	Unsigned integer	0x15	0x03/0x10	
Relay3	Unsigned integer	0x16	0x03/0x10	
Relay4	Unsigned integer	0x17	0x03/0x10	
Relay5	Unsigned integer	0x18	0x03/0x10	
IO 1	Unsigned integer	0x19	0x03	
IO 2	Unsigned integer	0x1a	0x03	

Example: Setting Relay 1 open request frame

The format of the request frame to set relay 1 ON is as follows: ON=0x01,OFF=0x00

Definition	Address field	Function Code	Start Address		Number of Registers		Number of bytes	Value		CRC
Byte	0	1	2	3	4	5	6	7	8	9-10
Content	0x01	0x10	0x00	0x14	0x00	0x01	0x02	0x00	0x01	